CX31-P dimensions

CX31-P

(Unit: mm)

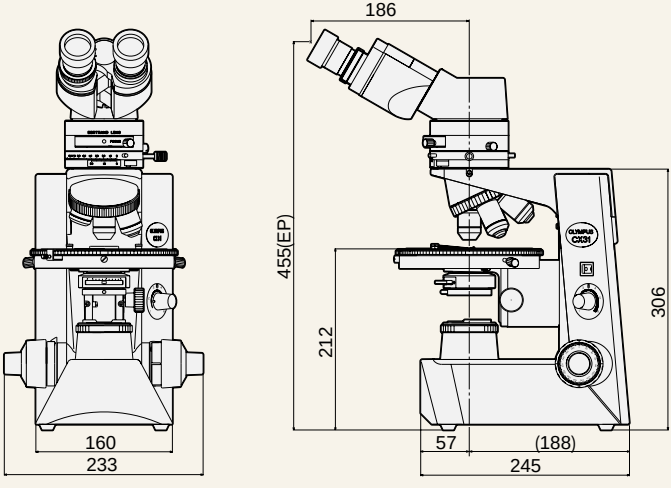

Configuration weight: 8.7kg